1

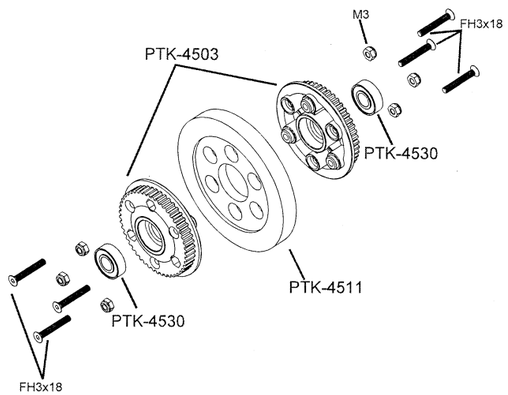

2

▶ Apply screw Lock.
▶ ネジロック剤を併用してください。
▶ 스크류 록 사용.

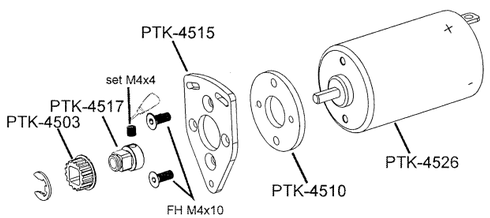

3

▶ Apply screw Lock.
▶ ネジロック剤を併用してください。
▶ 스크류 록 사용.

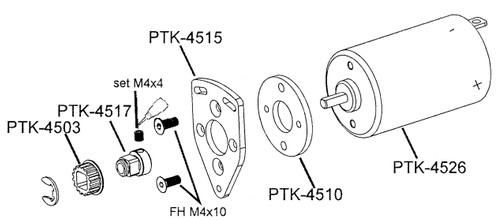

4

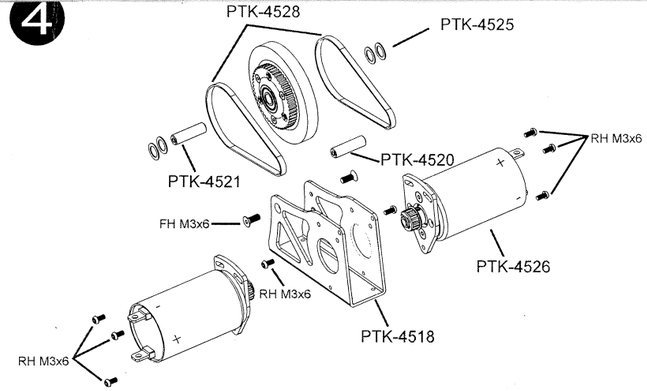

5

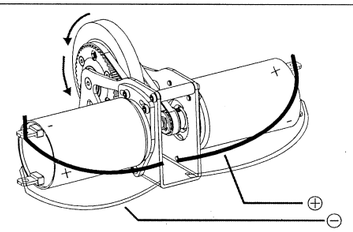

6

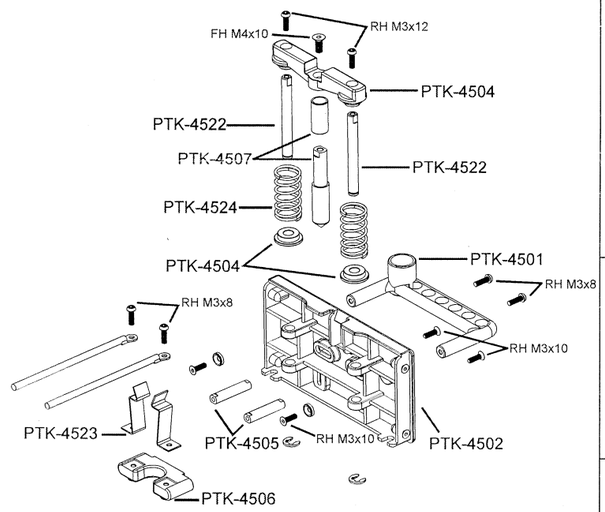

7

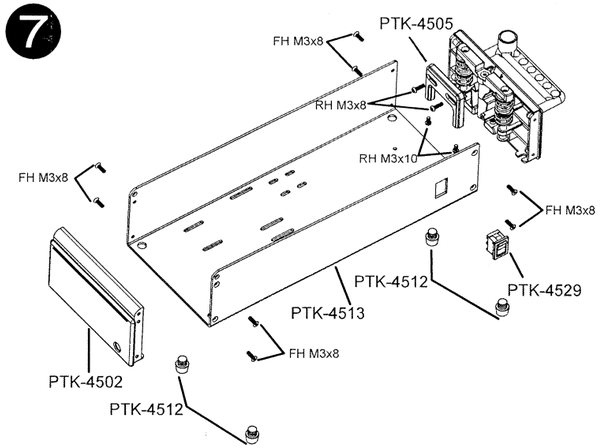

8

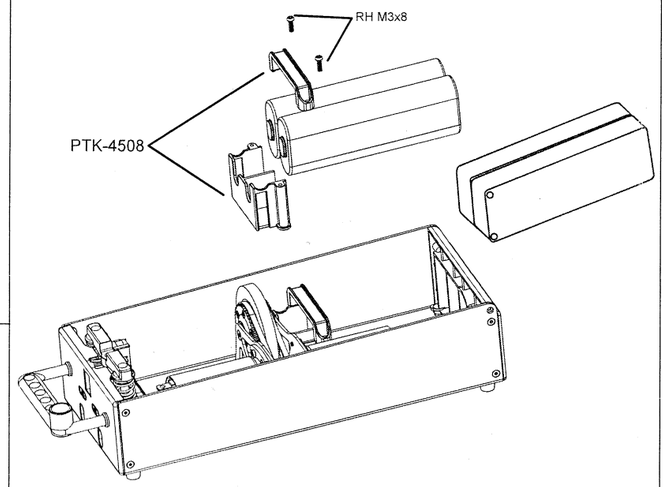

9

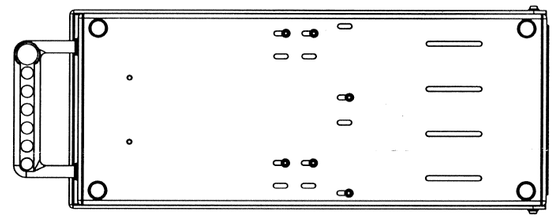

10

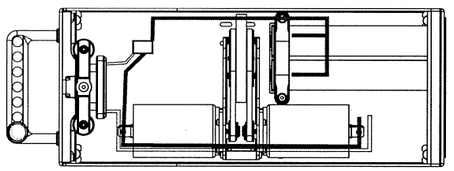

11

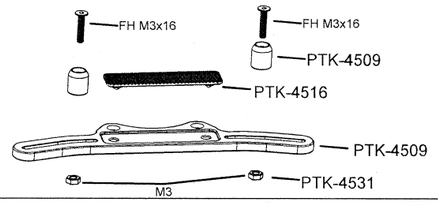

12

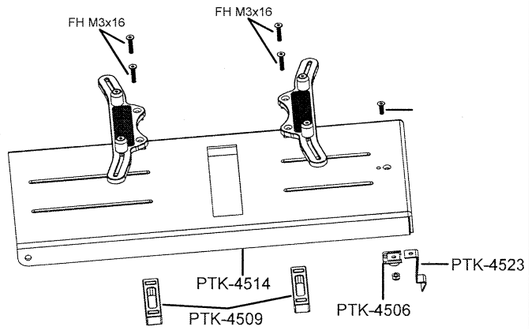

13

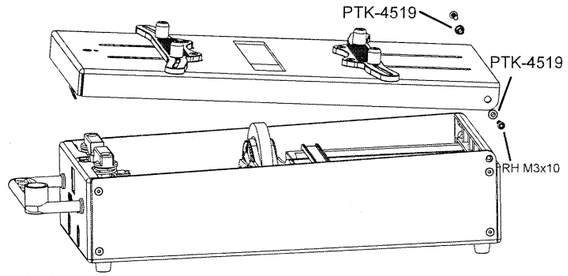

1/8 Scale Dual Motor Nitro Starter Box

SURESTART

ProTek RC
A higher level of performance

P/N	Part Name
PTK-4501	ProTek R/C "SureStart" Replacement Plastic Handle
PTK-4502	ProTek R/C "SureStart" Replacement Front & Rear Plastic Cover
PTK-4503	ProTek R/C "SureStart" Replacement Gear Set
PTK-4504	ProTek R/C "SureStart" Replacement Spring Plate & Mount
PTK-4505	ProTek R/C "SureStart" Replacement Switch Adjustment Post & Holder
PTK-4506	ProTek R/C "SureStart" Replacement Contact Mounting Plate
PTK-4507	ProTek R/C "SureStart" Replacement Copper Bushing & Mounting Post
PTK-4508	ProTek R/C "SureStart" Replacement Battery Holder
PTK-4509	ProTek R/C "SureStart" Replacement Upper Deck Adjustable Post Set
PTK-4510	ProTek R/C "SureStart" Replacement Motor Mount Plate
PTK-4511	ProTek R/C "SureStart" Replacement Rubber Wheel
PTK-4512	ProTek R/C "SureStart" Replacement Bottom Rubber Feet
PTK-4513	ProTek R/C "SureStart" Replacement Aluminum Lower Cover
PTK-4514	ProTek R/C "SureStart" Replacement Aluminum Upper Cover
PTK-4515	ProTek R/C "SureStart" Replacement Aluminum Motor Adjustment Plate
PTK-4516	ProTek R/C "SureStart" Replacement Rubber Bushing (2)
PTK-4517	ProTek R/C "SureStart" Replacement Aluminum Gear Bushing 750 Motor (2)
PTK-4518	ProTek R/C "SureStart" Replacement Motor Mount
PTK-4519	ProTek R/C "SureStart" Replacement Cover Hinge Bushing
PTK-4520	ProTek R/C "SureStart" Replacement Motor Mount Brace
PTK-4521	ProTek R/C "SureStart" Replacement Rubber Wheel Shaft
PTK-4522	ProTek R/C "SureStart" Replacement 6x55.8mm Spring Support Pin (2)
PTK-4523	ProTek R/C "SureStart" Replacement Switch Contact
PTK-4524	ProTek R/C "SureStart" Replacement 1.4x32mm Spring
PTK-4525	ProTek R/C "SureStart" Replacement 8x12x0.5mm Washer
PTK-4526	ProTek R/C "SureStart" Replacement 750 Brushed Motor
PTK-4527	ProTek R/C "SureStart" Replacement Wire Set
PTK-4528	ProTek R/C "SureStart" Replacement Belt (HTD-3M-213)
PTK-4529	ProTek R/C "SureStart" Replacement Power Switch
PTK-4530	ProTek R/C "SureStart" Replacement 8x16x5mm Bearing
PTK-4531	ProTek R/C "SureStart" Replacement 3mm Square Nut (4)